PROJECT REFERENCE NO.	SHEET NO.
DN12183352	2D-5

*NOTE: SEE STD. DWG. 846.01
FOR GENERAL NOTES

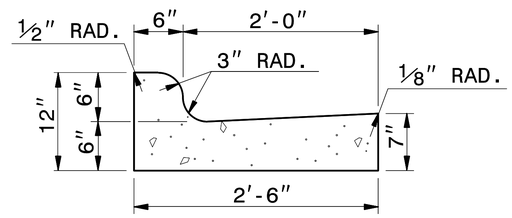

2'-6" CURB AND GUTTER

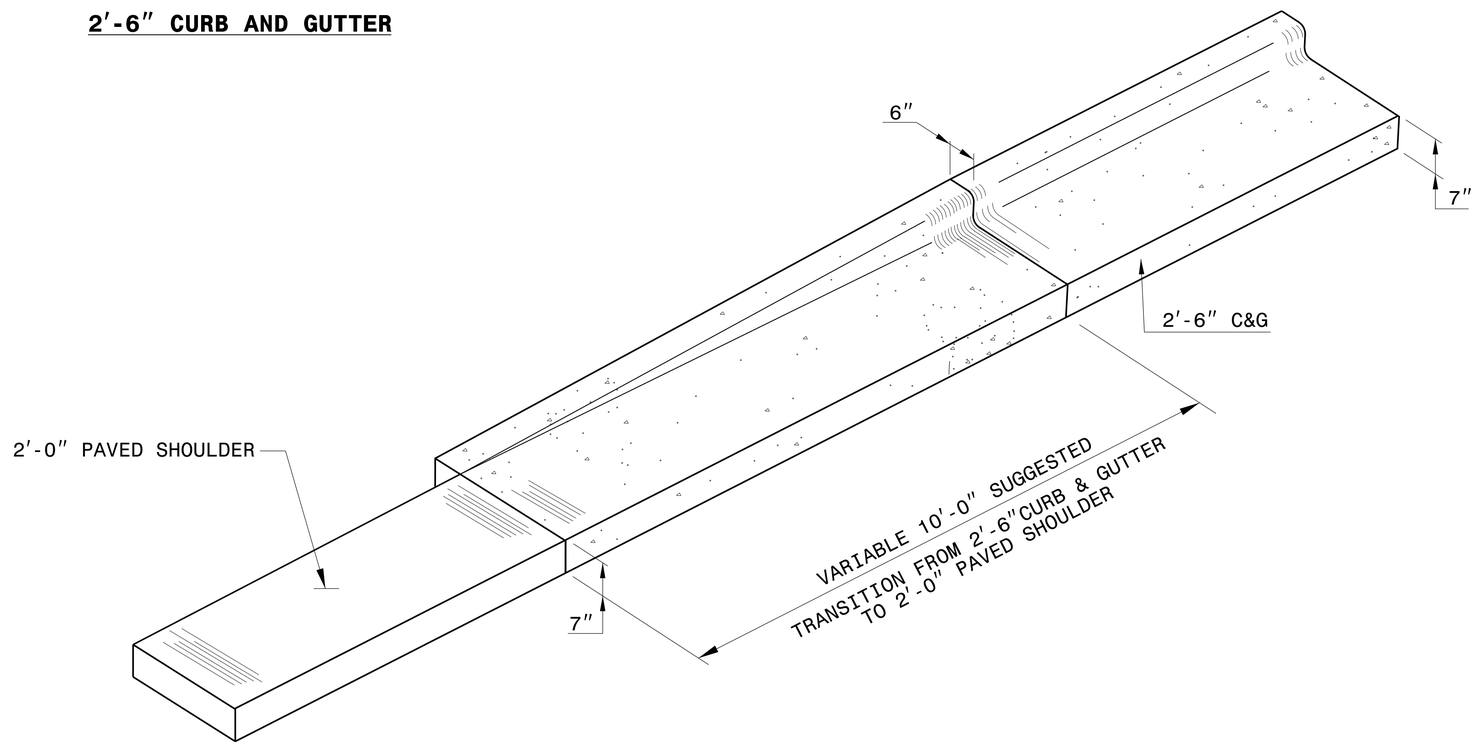

ISOMETRIC VIEW OF TRANSITION

NORTH CAROLINA PROFESSIONAL SEAL N-23444 ENGINEER Robert M. Hickerson
06/13/2025

DOCUMENT NOT CONSIDERED FINAL
UNLESS ALL SIGNATURES COMPLETED

**CONTRACT STANDARDS
AND DEVELOPMENT UNIT**
Office 919-707-6950 FAX 919-250-4119

**DETAIL OF 10' TRANSITION
FROM 2'-6"CURB & GUTTER
TO 2'-0" PAVED SHOULDER**

ORIGINAL BY: _____ DATE: _____
MODIFIED BY: rnbritt DATE: 04-13-2016
CHECKED BY: _____ DATE: _____
FILE SPEC.: details/nbritt/english/misc/c&g transition sections.dgn

5/14/99

10-MAR-2020 14:30
S:\Contracts\Contracts\Special Details\nbritt\english\misc\c&g transition sections.dgn
jhowerton AT CSD-320965